CHARGING SYSTEM
(Harness Modification For Internal Regulated Alternator)

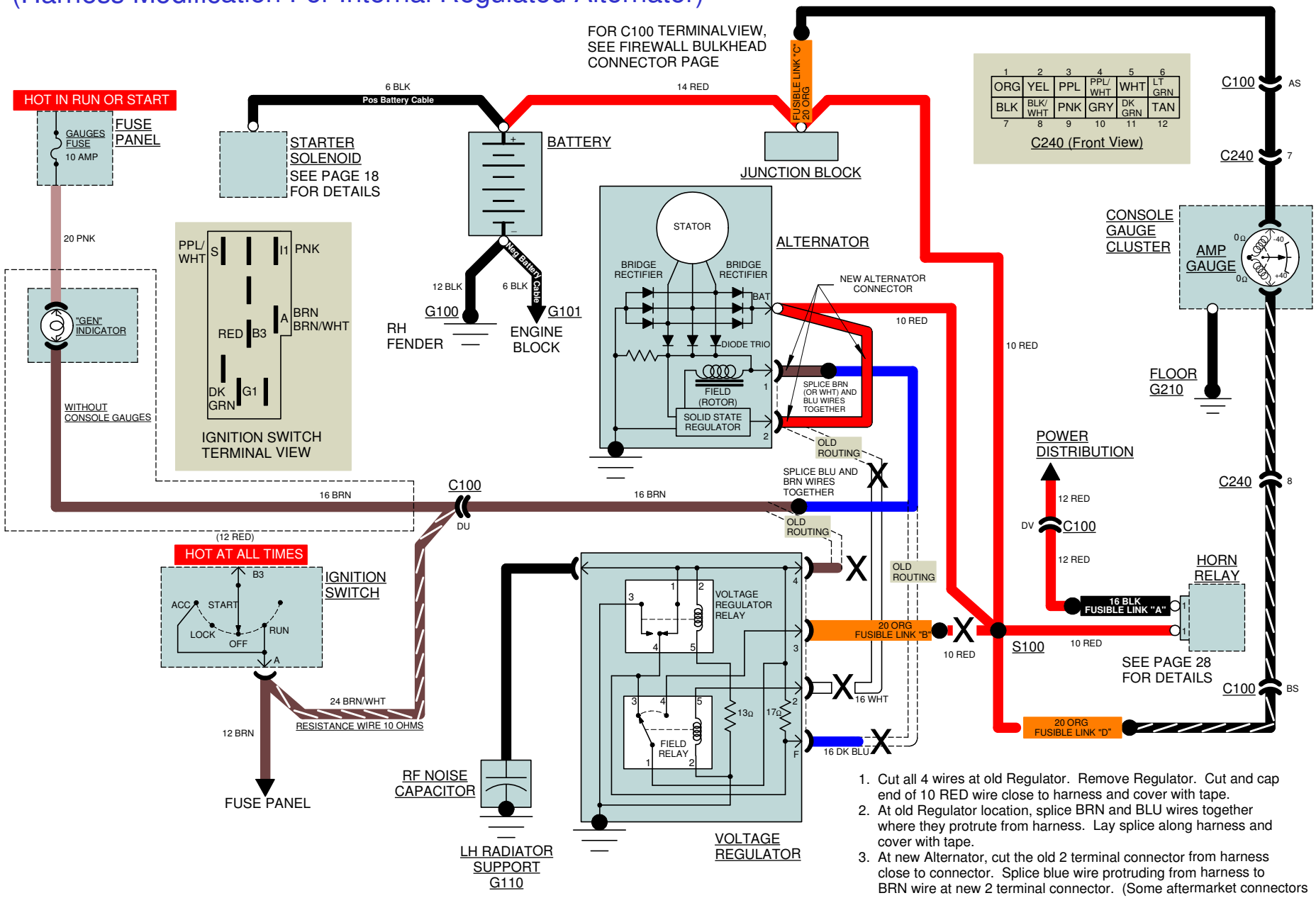

1. Cut all 4 wires at old Regulator. Remove Regulator. Cut and cap end of 10 RED wire close to harness and cover with tape.
2. At old Regulator location, splice BRN and BLU wires together where they protrute from harness. Lay splice along harness and cover with tape.
3. At new Alternator, cut the old 2 terminal connector from harness close to connector. Splice blue wire protruding from harness to BRN wire at new 2 terminal connector. (Some aftermarket connectors use a WHT wire instead of a BRN wire).
4. Connect RED Wire from new 2 terminal connector to new Alternator main terminal Stud.
5. Ignore and cut both ends of old WHT wire close to harness and cover with tape.

Copyright © 2005 Larry DuBois